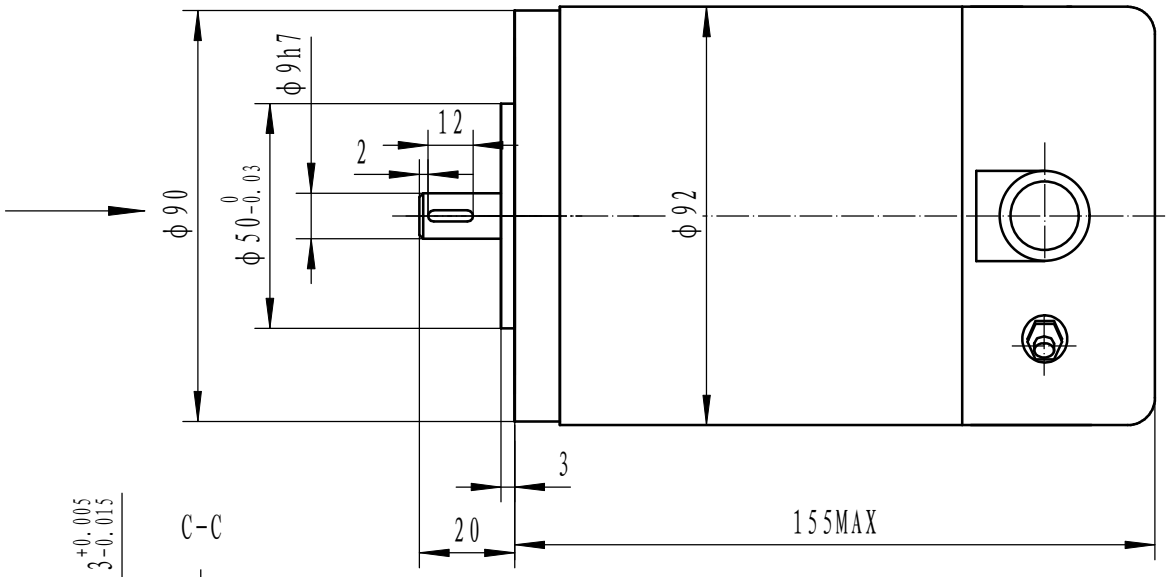

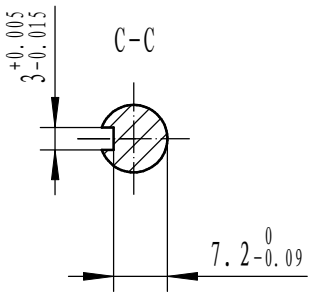

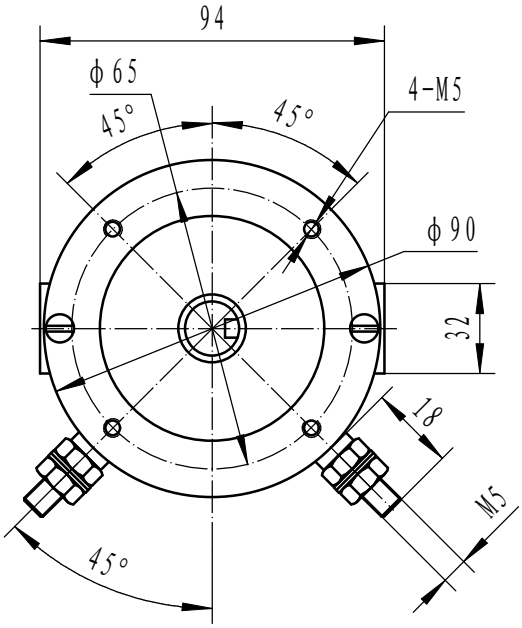

Model	Power(W)	Duty	Voltage(V)	Speed(rpm)
EC180.120	180/250	S1/S2 25′	12	3000
EC180.240	180/250	S1/S2 25′	24	3000

90ZYT50-56B14

PMDC MOTOR

1:2